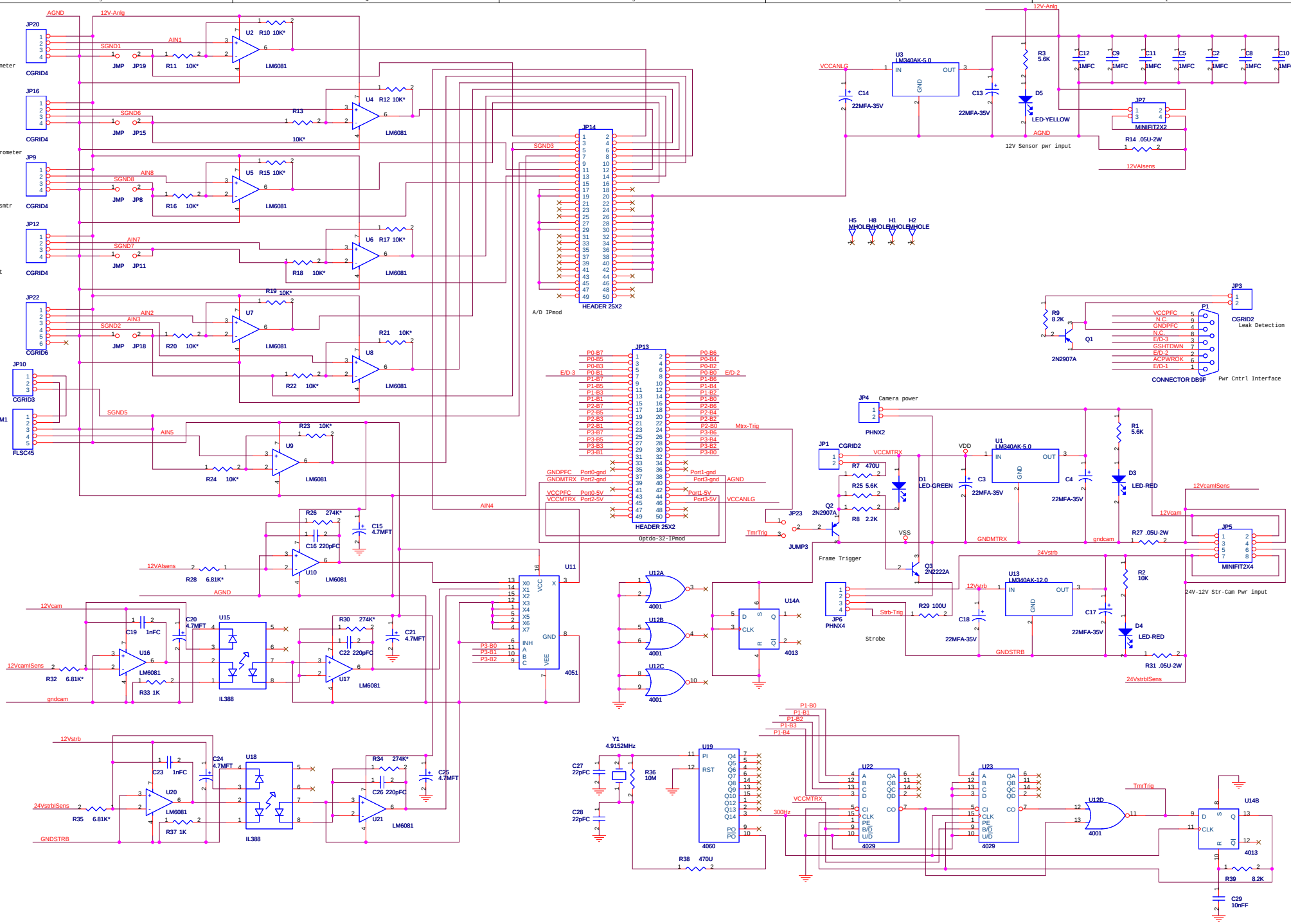

Title	<Title>	
Size C	Document Number <Doc>	Rev <RevCode>
Date: Tuesday, February 12, 2002	Sheet 1 of 1	